Summer 2018

sensornetworksinc.com

THE SNI SCOOP

INSPECTION, TESTING & ASSET - INTEGRITY SOLUTIONS

The SNI Scoop is Sensor Networks' quarterly newsletter. SNI aims to showcase our company in regards to initiatives, product releases, and company developments.

Updates...

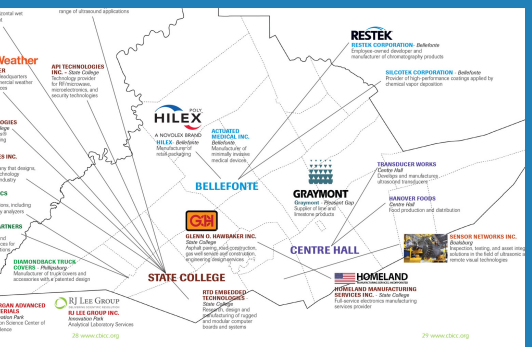

COME VISIT US!

Recently, Sensor Networks, Inc. has been represented as one of the top high-tech design and manufacturing technology companies in Centre County Pennsylvania. We are proud to represent our community and we are excited to be represented alongside so many other "like-minded" companies. In fact, several of these neighbors are key suppliers to SNI. State College and Centre County have evolved into the Ultrasonic Capitol of North America with over a dozen UT/NDT companies with the addition of Penn State University in the region.

JEFF JOINS THE TEAM

Sensor Networks Inc. is proud and pleased to announce the addition of its fourth Board of Advisor; Dr. Jeff Fortin. Formerly Engineering Leader of GE Inspection Technologies in Lewistown, PA, Jeff is currently Associate Vice President for Research and Director of the Office of Industrial Partnerships at Penn State University. Jeff is responsible for building strategic partnerships between the University and industry with the goal of accelerating technology transfer and supporting economic development. SNI welcomes to Dr. Fortin to our board and team!

SENSOR NETWORKS, INC

Inspection, Testing & Asset-Integrity Solutions

8 VALUES = 1 CULTURE

SAFETY
Safety is our #1 priority. It is important both in how we work and how our products contribute to the safety of our customer's products and services.

CUSTOMER SATISFACTION
Customers are our pride and joy. Their satisfaction is second only to Safety. We go the extra mile to earn our customer's trust and their business.

PASSION
We love what we do. It inspires us to work hard and provide our very best skills, talents, and knowledge.

CONFIDENCE
We are professionals with decades of industry experience serving a very important market need. We are confident in our team to provide the best possible solutions.

SUPPORT
Ours is not a culture of blame. We are there to support each other in every way we can. We believe in teamwork and in tackling obstacles together.

TRUST
We are truthful in all our communications and actions. We work towards building trust amongst all employees, customers, and stakeholders.

POSITIVE
We strive to cultivate a nurturing and encouraging work environment in which positivity and value can prosper.

SUSTAINABILITY
We understand our responsibility to provide for a better future for our stakeholders and posterity. We aspire to develop eco-friendly solutions on a dependable and profitable company platform.

This chart says it all! In July 2018, we will celebrate Value #1: Safety!

OUR INSTALLED SENSOR FAMILY TREE

Over the past 4 years, our ultrasonic sensor systems have evolved significantly based on the market's need along with our installed base of satisfied clients. We are continuously finding ways to improve our products and provide the best possible solutions for our customers who are looking to improve safety and lower operating costs all while enhancing data quality, integrity, and access.With a very broad range of solutions and products, we are tough to beat. No one does remote, non-intrusive, ultrasonic monitoring better than we do. For more on our product lines, check out our website: **www.sensornetworksinc.com**

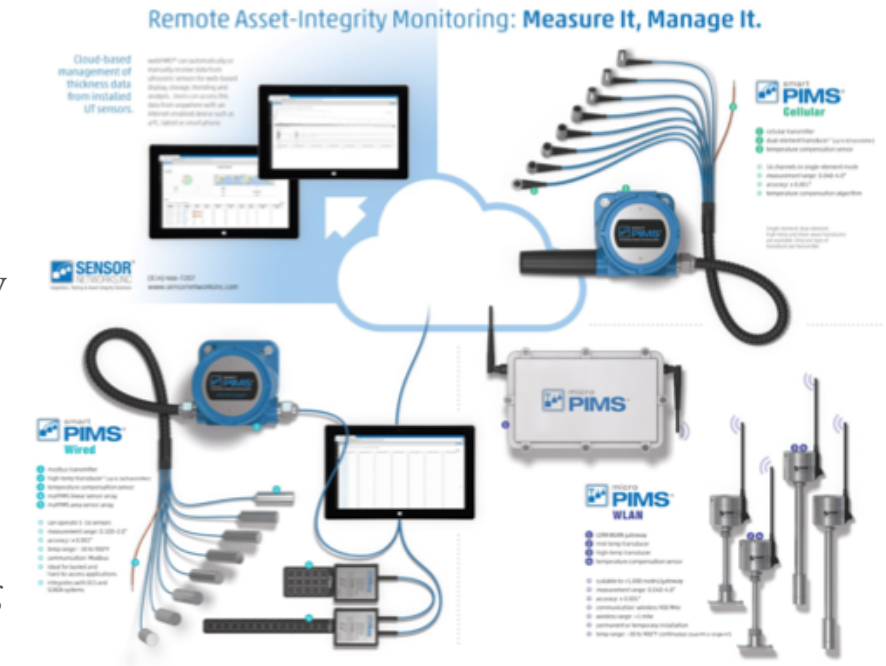

microPIMS®: Wires Not Included...Or Needed!

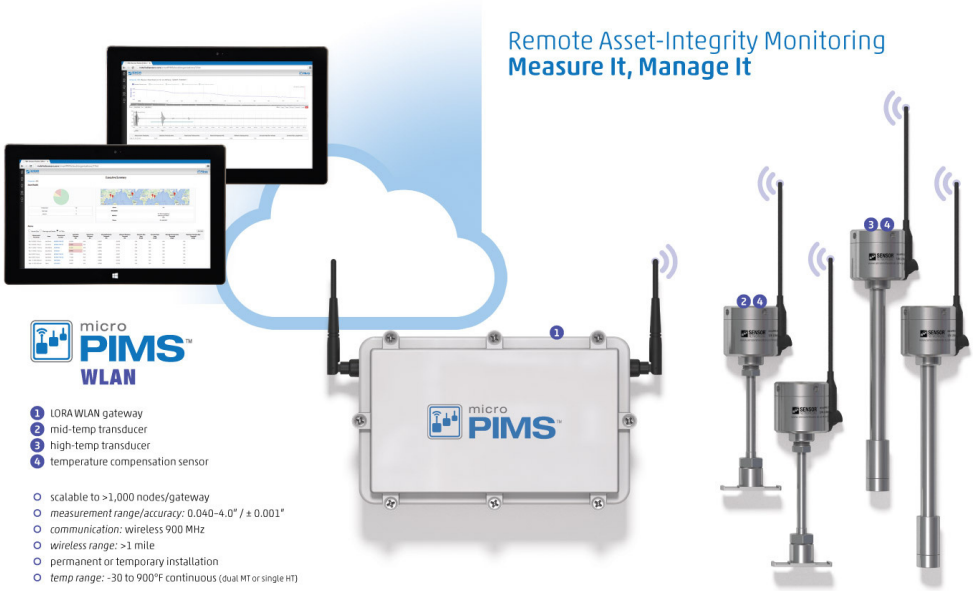

During NACE International's Annual Corrosion Conference in Phoenix, Arizona in April, Sensor Networks Inc. debuted its newest line of Ultrasonic Corrosion / Erosion Monitoring products: microPIMS®.

microPIMS are wireless, non-intrusive sensors with long - range wireless connectivity that tie in state-of-the-art ultrasonic measurement technology with the vast capabilities of the internet. This relationship provides for a comprehensive solution that allows for the highest level of measuring performance with ease of installation. The complete microPIMS kits include sensors, an online gateway, and webPIMS™ software; a cloud-based data and information portal where temperature - corrected corrosion rate calculations are made.

The microPIMS Advantage:

- 1+ mile wireless range
- 15 minute sensor installation/relocation
- .001" sensor accuracy
- -20° F (-29° C) to 932° F (500° C) operating temperatures
- 1 gateway needed ... 0 repeaters
- $15K Starter Kits

For more information, check out the introductory video at https://youtu.be/EoeV0VkKEU8

Unlike intrusive or competing technologies, microPIMS' ultrasonic sensors allow for easy repositioning and placement without any welding. This unique distinction allows for the sensors to be placed in locations that would otherwise be difficult and/or expensive to manually measure. The ultrasonic sensors of microPIMS come in two interchangeable models: a high-temperature dual-element sensor (300° F), and a delay-line probe for ultra-high-temperatures (932° F). The longevity of a five - year battery life coupled with long-range (~1 mile) wireless connectivity provides for frequent and accurate data that allows for fast and easy resolution of any corrosion/erosion rate issues. **Measure it, Manage it!** Early detection is key to saving time, money, and equipment failures. Interested? Contact Steve Strachan at **strachan@sensornetworksinc.com**

TERRIFIC &TIMELY TRANDUCERS

"The transducer enables and optimizes the Ultrasonic exam"

- Dane E. Hackenberger
Senior Applications Engineer

Ultrasonic Transducers are our bread and butter. Our team has decades of knowledge and experience to design and fabricate almost any standard or custom, conventional or phased-array UT solutions solving the most complicated NDT challenges. With a focus on rapid prototyping, cost effectiveness, fast turn-around times and high performance, we are dedicated to creating the best-fit solution for everyone. For more information, contact Jeff Anderson **anderson@sensornetworksinc.com**

ASME CODE Update and UT Transducers

Wedge Curvature

(T-432.2)

$$D \leq \frac{A" * A"}{.113"}$$

A= Probe dimension (") in axis of curvature
D= Maximum pipe diameter (")

Actual Component Outside Diameter, in.	Allowable Increase in Contour Diameter Over Component O.D., in.
<4.0	<1.0
≥4.0 to 10	<2
>1o	<4

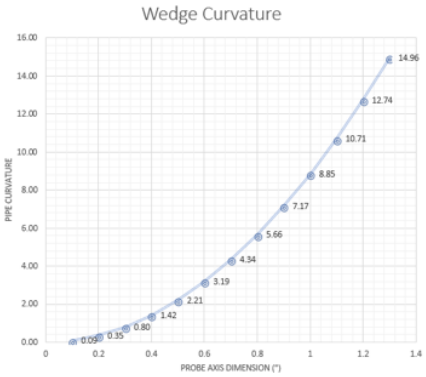

The new 2017 Edition of ASME BPV - SECTION V, ARTICLE 4 states that regarding the UT of welds for boilers, pressure vessels and piping states, all examinations performed on a curved component having a diameter less than 14 in. (at the examination surface) shall be performed using a contoured wedge. This revision ensures that sufficient ultrasonic coupling is achieved all while limiting any potential rocking of the search unit as it is moved along the radius of the component.These specific measures have added another layer of compliance for company's NDT departments to be in alignment with the BPV code. Sensor Networks Inc. is here to help. SNI has extensive experience and knowledge along side in-house CIVA Modeling, CAD/CAM, and 5-Axis CNC mill to create almost any radiused transducer whether it be ID , OD, axial, radial , compound-radius wedge, delay-line, or dual-element.

GE Aviation & CFM56 Issue

On April 17th, an incident took place when Southwest Airlines Flight 1380, a Boeing 737 powered by 2 CFM56 engines, experienced an in-flight fan-blade failure that triggered other engine and airframe component failures. Within hours, SNI was contacted by GE Aviation to prepare for an inevitable flurry of activity. Over the past several weeks, we delivered a large amount of special-purpose transducer-wedge combinations

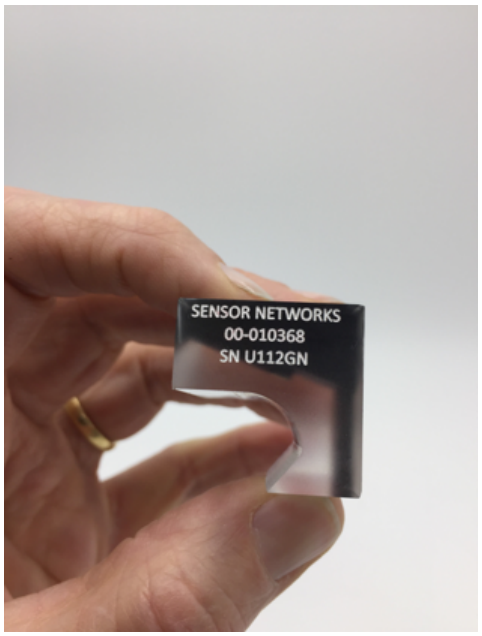

for fan-blade dovetail UT inspections.

SNI has been shipping CFM 56 fan-blade inspection kits as fast as we can build them. This has been priority #1 at our Boalsburg factory for the past several weeks. Managed by Jim Shimp, Senior Application Engineer, the Boalsburg team has shipped many kits to GE Aviation by mid-May. For more on inspection kits, contact Jeff Anderson at **anderson@sensornetworksinc.com**

Zetec Collaboration

Our primary business consists of designing and building standard and custom transducers including PAUT. Our custom capabilities are frequently requested by those who use industry-prominent instruments such as Olympus, GEIT or others. Occasionally, we are asked to provide a fully-integrated solution including UT probes, fixtures, an instrument, calibration blocks, a procedure and operator training. Sensor Networks Inc. is pleased to become an official Value-Added Reseller (VAR) or Integrator for Zetec's line of advanced phased-array flaw detectors. This is just one example of the infinite capabilities Sensor Networks transducer solutions can offer.

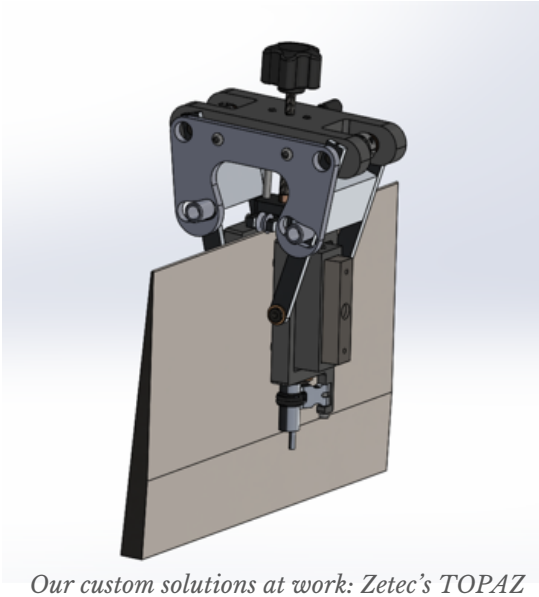

Our custom solutions at work: Zetec's TOPAZ PAUT instrument combines with SNI's custom phased-array, through-transmission probe set including spring-loaded fixture and couplant supply

Alpha 2 DFR+

We have recently tested our redesigned Alpha2 DFR+ on the entire CL Family (CL304, CL3, CL5 and CL400) of precision thickness gages. We shipped a beta unit to Boeing last week and they have approved the product for this use. Alpha 2 DFR+ is a 15 MHz x 0.187" Ø transducer that is highly-damped and ideally suited to measure aluminum and other metals in the 0.010" to 1.000" range with high resolution.

NASA's Ultra-Custom Phased-Array Transducer

Sensor Networks is proud to announce that we were awarded a contract with NASA to design and fabricate a custom 253-element circular ultrasonic array transducer. The "UT Probe" will be used in a phased-array ultrasonic test configuration to do research at NASA's Langley Research Center in Hampton, VA on the Advanced Composites Project. NASA research scientist, Dr. Patrick Johnston, indicates that he'll be using this novel approach to measure composite-fiber orientation and waviness in the material's matrix structure. Bob Shaffer, Senior UT Applications Engineer and SNI's GM, Jeff Anderson indicate that the company is pleased to have this special opportunity to develop custom transducers that advance the state- of-the-art of high strength aerospace composite materials research.

New In-House Capabilities

Customers are our pride and joy. To make sure we keep them happy, we are always looking for opportunities to enable and deliver their custom solutions in a timely fashion. To do so, we have expanded our machine shop to include a new CNC lathe and a dicing saw machine to slice and dice ceramic material. This increases our in-house capabilities, furthering the vertical integration of phased-array transducer production. By having direct control on production, we can provide faster and more predictable delivery times and provide for more control over manufacturing quality. These in-house capabilities also lower overall costs, thus providing for more cost-effective solution for our customers.

Remote Visual Inspection Update:
JAWS 2.0™ is Available August 1st

JAWS 2.0 has been finalized and prepped for product launch on August 1, 2018. A lot has changed since the original JAWS prototype was shown earlier this year with favorable feedback from the market. JAWS 2.0 offers new opportunities that puts ease-of-use, cost effectiveness and user accessibility to the forefront.

JAWS 2.0 is the world's first small and lightweight, motorized retrieval device with integral high-definition (HDTV) CMOS camera and LED lighting. It is robust and will work in most industrial environments including underwater. With a rechargeable battery power pack, the tool is quite portable and can be hand-carried both on an airplane and to any job site. Interchangeable jaws allow equipping the tool for securing irregularly-shaped objects requiring retrieval. A full line of rodding and positioning accessories are available to deliver the tool to the most remote locations. Whatever the retrieval task, we have the solution for you.

For all enquiries, contact Mark Matthews
matthews@sensornetworksinc.com

SNI offers the JAWS 2.0 retrieval tool in a basic package, however with our new updates, we have developed the Ultimate JAWS 2.0: A Comprehensive Remote Retrieval Kit. The basic solution comes with:

- Motorized Gripper with interchangeable jaws (Aircraft-grade Aluminum and Stainless-Steel Construction, ~1 lb. and 8.2" long)
- Battery Power Pack / Controller & 5" Color Display
- 15M (50 ft) Main Cable with optional 15M (50 ft) Extension cable
- Jaw Set: Flat Serrated Teeth
- Operation Guide

Our Jaws 2.0 line includes sampling cups, curved serrated jaws, fork & line, pliers, magnet, snare, and hook. The Ultimate Jaws 2.0: Comprehensive Retrieval Solution Kit includes all the components in the basic solution with the inclusion of additional end effectors plus a 4" diameter x 5-foot quiver of 40 push poles, a spare gripper, rare-earth magnets, and various positioning couplings.